AERODROME OBSTACLE CHART - ICAO

DIMENSIONS AND ELEVATIONS IN METRES

TYPE A (OPERATING LIMITATIONS)

TAK / Mae Sot Airport

MAGNETIC VARIATION 0.94°W (2022)
ANNUAL RATE OF CHANGE 0.04°W

RWY 09 / 27

DECLARED DISTANCES		
RWY 09		RWY 27
2100	TAKE-OFF RUN AVAILABLE	2100
2100	TAKE-OFF DISTANCE AVAILABLE	2100
2100	ACCELERATE STOP DISTANCE AVAILABLE	2100
1690	LANDING DISTANCE AVAILABLE	2100

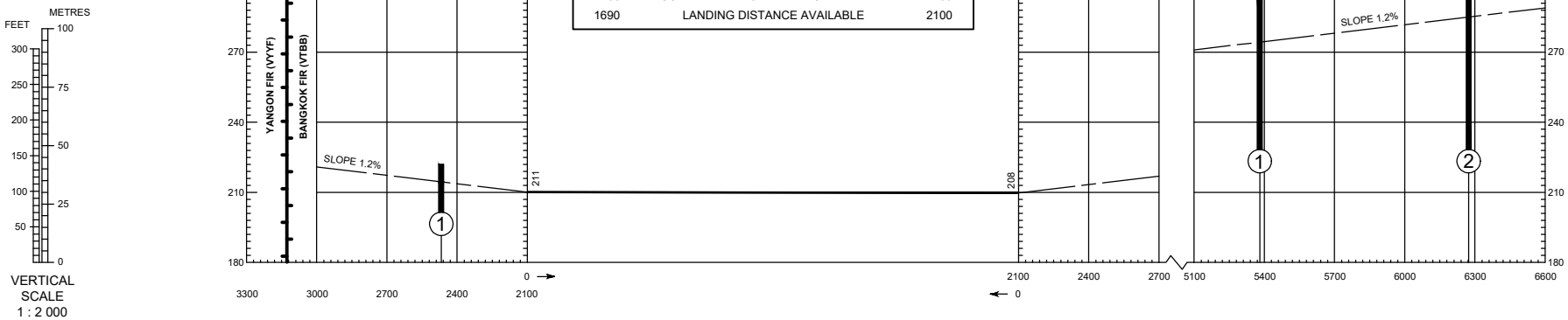

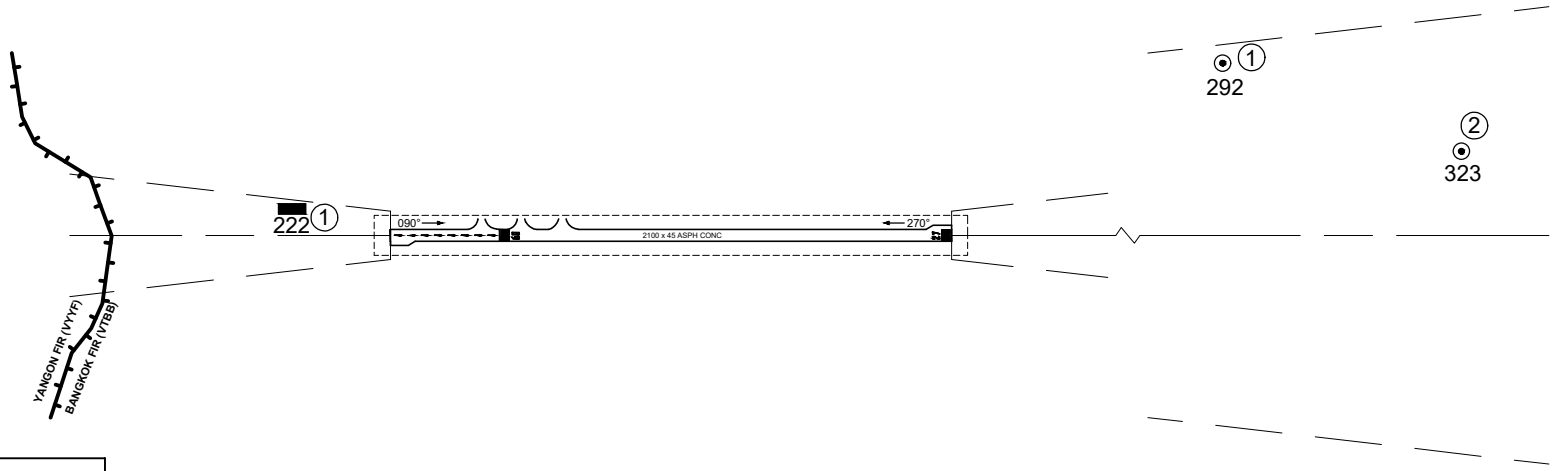

LEGEND	
IDENTIFICATION NUMBER	1
POLE, TOWER, SPIRE, ANTENNA, ETC	
BUILDING OR LARGE STRUCTURE	
FLIGHT INFORMATION REGION (FIR)	

HORIZONTAL SCALE 1 : 20 000

METRES

400 300 200 100 0 500 1000 1500 2000 2500

1000 500 0 1000 2000 3000 4000 5000 6000 7000 8000

FEET

ORDER OF ACCURACY
HORIZONTAL 0.5 m
VERTICAL 0.5 m

CHANGE: NEW CHART.